版本:X1

ECN. NO.	REV.	DATE	DESCRIPTION	CHANGE	APPD.
	X1	08/03'2015	初版发行	/	

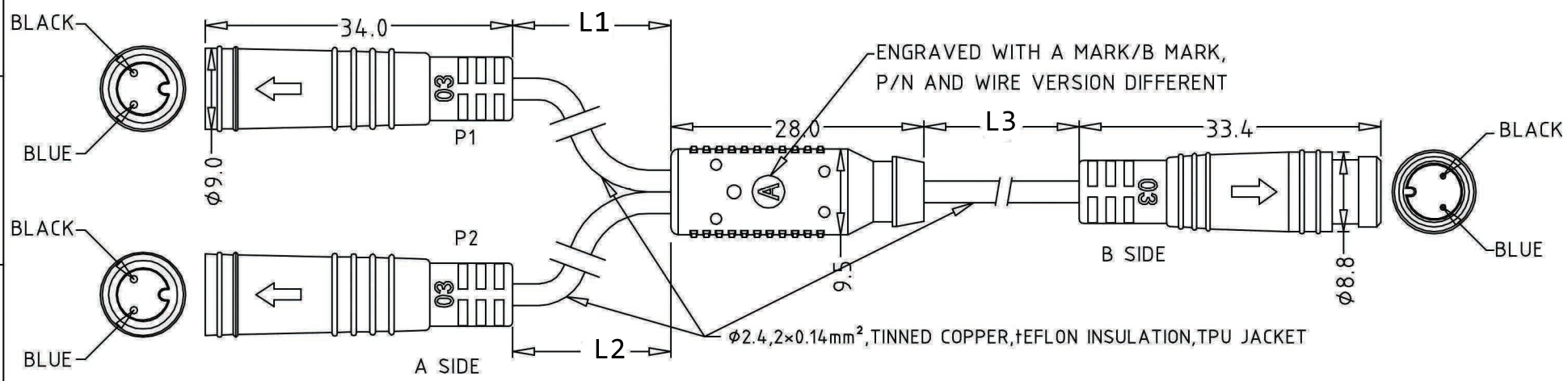

L1 = 50mm tolerance +8mm/-0mm
L2 = 50mm tolerance +8mm/-0mm
L3 = 1200mm tolerance +10mm/-0mm

1.Electrial Characteristics:
1.1:Low level contact resistance:10milliohm Max.
1.2:Directric withstanding voltage:500VAC.
1.3:Insulation resistance:20megaohm Min.
2.Mechanical Characteristics:
2.1:Durability:200cycle.
3.Performance:
3.1:Voltage rating:48V AC,60V DC.
3.2:Current rating:
2Amps (ϕ0.6pin and socket).
3.3:Operation temperature:-25°C~+80°C.
4.Requirement:
4.1:Enviromental pratection,accord ROHS 2.0.
5.Applicable wire:
ϕ0.6 Contact:0.2mm² MAX.
6.Degree of protection:
IP66 in mated condition

PART NO.	MARK	NO.	A SIDE		B SIDE
			P1	P2	
6300.0015	A	1	BLACK	BLACK	BLACK
		2	BLUE	BLUE	BLUE

MAT'L: N/A		Higo 上海海固电器设备有限公司 Shang hai Higo Electronic Technology Co., Ltd.			
UNITS: mm		TITLE: 1T2 CABLE	PART NO.:		
X.±: 8	X°.±: 5°	APPD:	DWG NO.:		
.X±: 0.5	.X°±: 2°	CHED:			
.XX±:0.05	.XX°±:1°	DRAW: Gary zhou 08/03'2015	SCALE N/A	SHEET 1/1	REV.