Product sheet

Automation technology

Product	**Contacts 5: Female panel mount connector, POWER, with single wires, AWG 18, PG 9, UL approval**	Area	**M12-A Series 713/763 POWER**
		Article number	**09 3442 433 05**
Pole	**5**		

Illustration

Scale drawing

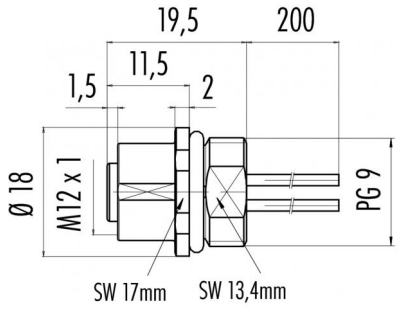

Contact Arrangement

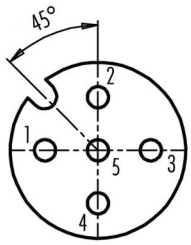

1 braun/*brown*
2 weiß/*white*
3 blau/*blue*
4 schwarz/*black*
5 grau/*grey*

Technical data

Common values

Connector Design	Female panel mount connector
Connector locking system	screw
Termination	Single wires
Wire gauge (mm)	0.9 mm^2
Wire gauge (AWG)	18
Upper temperature	85 °C
Lower temperature	-40 °C

Electrical values

Rated voltage	125 V
Rated impulse voltage	1500 V
Pollution degree	3
Overvoltage category	II
Material group	II
Rated current (40°C)	Contact 1-4 8A, contact 5 2A
Volume resistivity	≤ 3 mΩ
EMV compliance	not shielded
Degree of protection	IP67
Mechanical operation	> 100 mating cycles

Material

Material of contact	CuSn (Bronze), CuZn (Brass)
Contact plating	Au (Gold)
Material of contact body	PA
Material of housing	Nickel-plated zinc die casting

Contacts 5: Female panel mount connector, POWER, with single wires, AWG 18, PG 9, UL approval